ELCO Lighting

Project name:

Fixture type:

Date:

2" High Lumen LED Round Elm™ Downlight with 5-CCT Switch



Energy-efficient Elm™ System LED Downlights featuring 5-CCT Switch to choose desired color temperature (2700K-5000K), and maximum flexibility by mix-&-matching any round or square trim (sold separately) with desire reflector or baffle finish (sold separately) to complete the assembly. Designed to be installed without the need for a housing.

Features

- Mix-&-Match Choosing Between Baffle or Reflector and Flexa™ Round or Square Trim (Sold separately)
- Baffle, Reflector, and Trims available in White, Black, Haze & Bronze color finishes (Sold separately)
- Compatible with Universal Frame only
- IC Rated for Direct Connect with Insulation
- 12W / 850 lm / 120V
- 5-CCT Switch
- CRI 90+
- ETL listed
- Triac/ELV Dimmable

Specifications

Wattage	12W
Lumens	850 lm
Voltage	120V
Color Temp.	2700K, 3000K, 3500K, 4000K, 5000K
Dimmable	Triac/ELV
Lamp Type	LED
CRI	90+
Damp Location	Listed

Options



Step 1



Step 2



Step 3

Dimensions

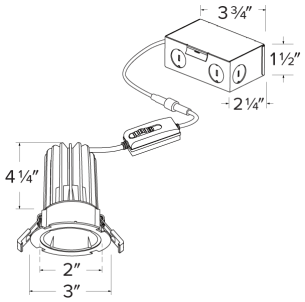

Product Number

Item	Description	Lamp type	Lumens	CCT	Watts	Voltage	Dimming
ERT2HL08CT5	2" Highlumen LED Downlight	LED	850 lm	2700K, 3000K, 3500K, 4000K, 5000K	12W	120V	Triac/ELV

Product Number Builder

Example: **ERT2HL08CT5**

2″ Highlumen LED Round Elm™ Downlight	Color Temperature
ERT2HL08	

CT5 2700K-5000K

© ELCO Lighting 2022. All rights reserved • Rev. 17 Dec 2021 • ELCO Lighting reserves the right to make specification and design changes without notice.

Compatible Products

For use with **2″ ERT2HL08CT5 Downlight**

2″ Reflector & Baffle to Mix-&-Match



for 2″ LED Elm™ Downlights
Reflector

CAT NO.	SPECIFICATIONS
ERT210W	White Finish
ERT210B	Black Finish
ERT210H	Haze Finish
ERT210BZ	Bronze Finish



for 2″ LED Elm™ Downlights
Baffle

CAT NO.	SPECIFICATIONS
ERT214W	White Finish
ERT214B	Black Finish
ERT214BZ	Bronze Finish

2″ Flexa™ Round & Square Trims to Mix-&-Match



for 2″ LED Elm™ Downlights
Round Flexa™ Trim

CAT NO.	SPECIFICATIONS
ERT2RW	White Finish
ERT2RB	Black Finish
ERT2RBZ	Bronze Finish



for 2″ LED Elm™ Downlights
Square Flexa™ Trim

CAT NO.	SPECIFICATIONS
ERT22SQW	White Finish
ERT22SQB	Black Finish

© ELCO Lighting 2022. All rights reserved • Rev. 17 Dec 2021 • ELCO Lighting reserves the right to make specification and design changes without notice.

Compatible Products

For use with **2″ ERT2HL08CT5 Downlight**

2″ Elm™ New Construction Frames

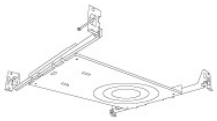

Universal Frame for 2″, 4″ and 6″
New Construction

CAT NO.	SPECIFICATIONS
E246LF1	For 2″, 4″ and 6″

© ELCO Lighting 2022. All rights reserved • Rev. 17 Dec 2021 • ELCO Lighting reserves the right to make specification and design changes without notice.